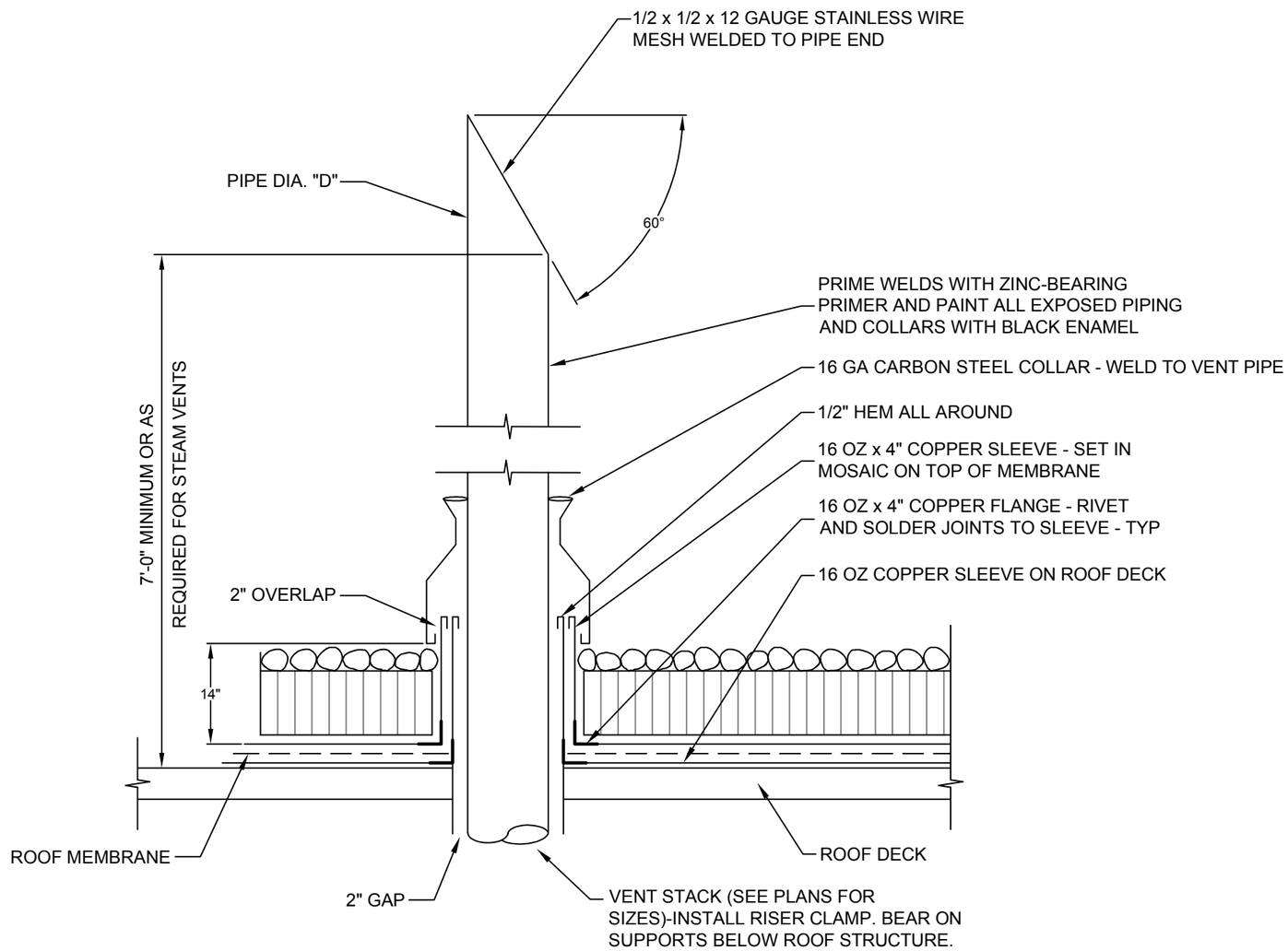

IRMA STEAM RELIEF VENT DETAIL
NO SCALE

MICHIGAN STATE UNIVERSITY
Infrastructure Planning and Facilities

IRMA
STEAM RELIEF VENT DETAIL
TYPICAL DETAIL

DRAWN CHARLAND
DATE 05/11/2016
SCALE AS NOTED
REVISIONS

IRMA STEAM RELIEF VENT DETAIL

1 OF 1